clearglass SOLUTIONS
THE CHOICE IS CLEAR

Sizes available include 100 x 100 and 120 x 120
Finishes include Mirror polish, Satin and Brushed.

Spider Assembly Series | Model:G290°

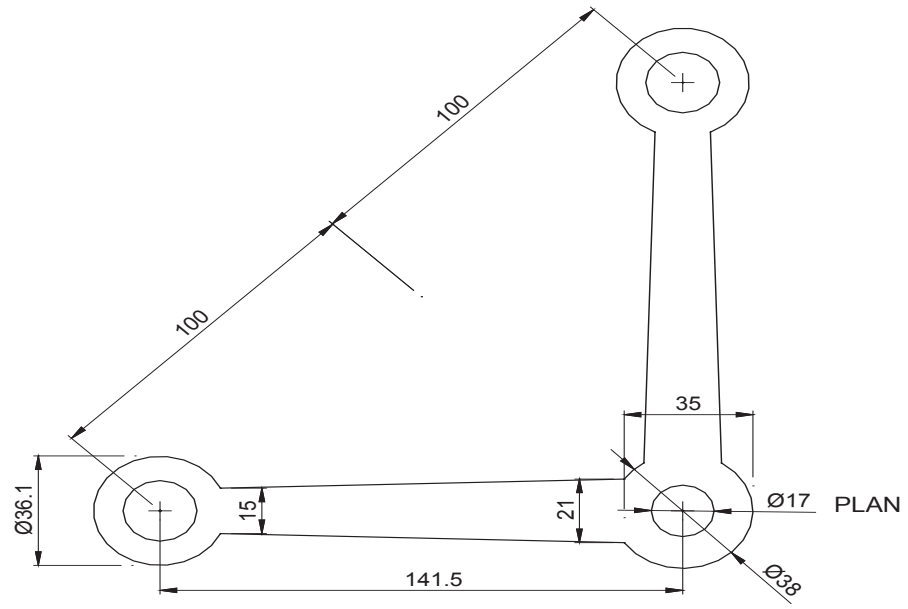

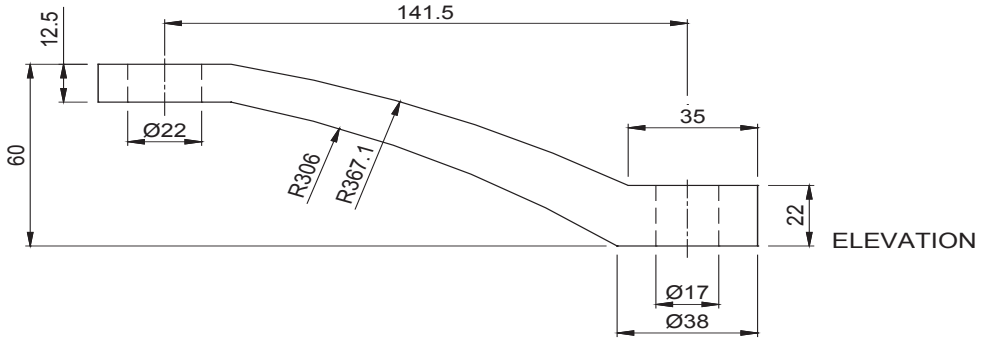

Clearglass Solutions
www.clearglass.com.au
Fax: 035942 9286
Email: info@clearglass.com.au
Phone: 0432 085 007